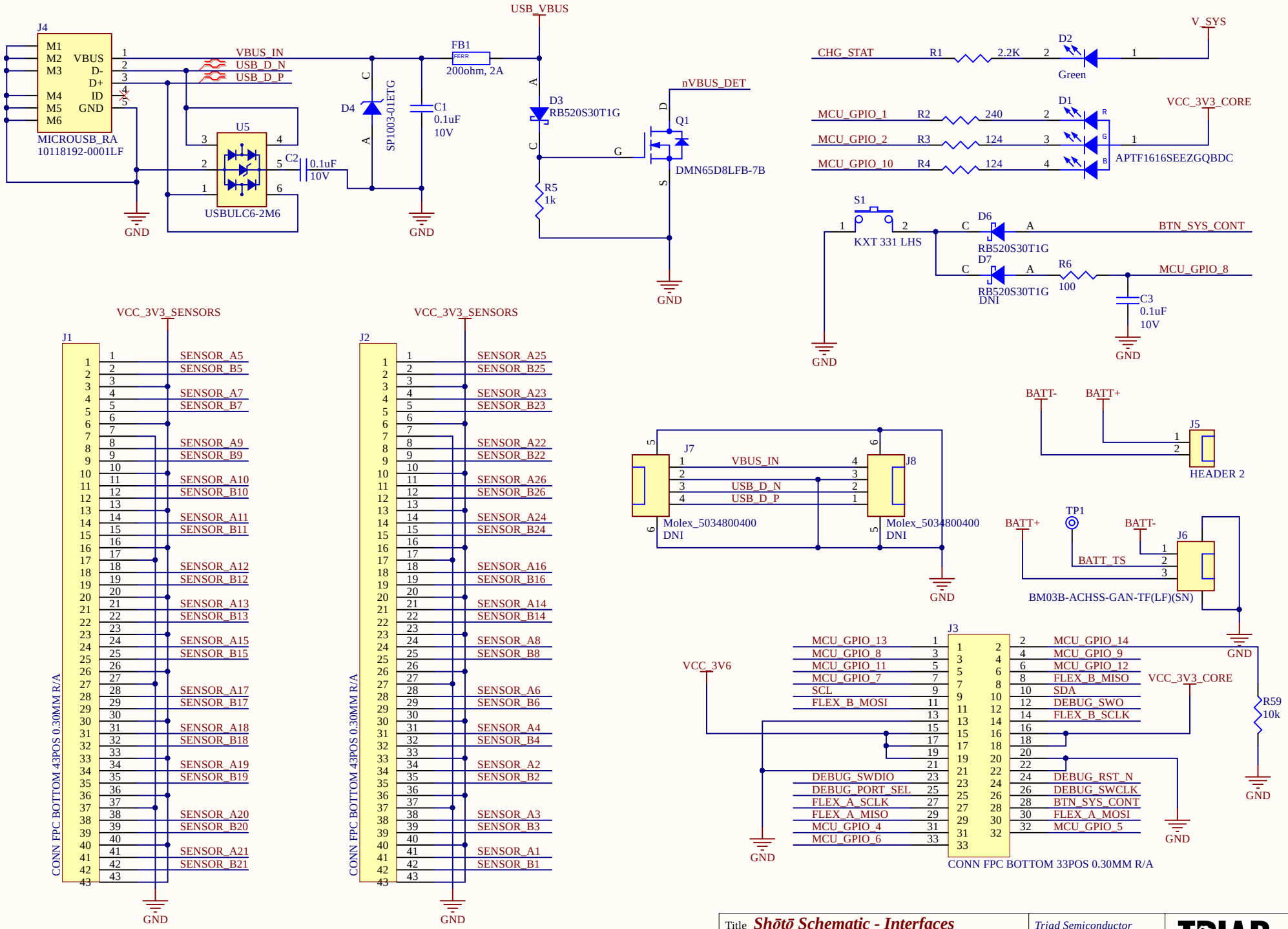

Title	*Shōtō Schematic - Interfaces*		
Size: A4	Number:	Revision 2	
Date: 10/22/2018		Sheet 1 of 6	
Engineer: John Seibel			

Triad Semiconductor
1760 Jonestown Rd
Winston-Salem, NC 27103
United States

TRIAD semiconductor